SPECIFICATION FOR APPROVAL

(PB-FREE APPLICATION)

CUSTOMER	**:**	
ITEM	**:**	**ADAPTER**
DESCRIPTION	**:**	**120W AC/DC POWER SUPPLY**
CUSTOMER P/N	**:**	
ISSUED P/N	**:**	
DATE	**:**	**2011. 03.27**

CUSTOMER'S APPROVED

APPROVED		
2011. .		
MODEL		
DESC		
PART NO.		
EN'GR	CHECKED	APPROVED

*REV NO. : 5.0				
	CUIT.	MECH.	SAFETY	EMI
CHECKD				
APPROVED				

MAKER : NANJING FRONTEK Co., Ltd.

DESIGN & MANUFACTURE : NANJING FRONTEK Co.,Ltd.

SALES : KANGJIN Co.,Ltd.

TEL : 82-32-327-6502 (HEAD OFFICE & SALES)

TO :

DATE : 2011.03.29

China Plant 211102

B-16,BAIJIA HU KE JICHAN YE YUAN,NO2,QING SHUI TING XILU,

JIANG NING DISTRICT,NANJING CITY,CHINA

Tel : (86)25-52726758-8012

Fax : (86)25-52726903

DOCUMENTATION FOR APPROVAL

PRODUCT	**:**	**120W AC/DC ADAPTER**
MODEL NAME	**:**	**FPS0120--05A**
COSTOMER MODEL NAME	**:**	

WRITTEN	CHECKED	APPROVAL

PLEASE RETURN ONE DOCUMENT AFTER APPROVED SIGN.

CONTENTS OF SPECIFICATION

NO.	CONTENTS	PAGE
	REVISION HISTORY	4
1	SCOPE	5
2	ELECTRICAL PERFORMANCE	5~6
3	SAFETY STANDARD	6
4	CONNECTION	7
5	BLOCK DIAGRAM	8
6	MECHANICAL DRAWING	9
7	TOP SILK	10
8	BOTTOM PATTERN	10
9	LABEL DRAWING	11
10	CASE DRAWING	12
11	BOX DRAWING	13

1. Revision History

DATE	PURPOSE	PAGE	CONTENTS OF ALTERATION
2009.09.23	. Feedback noise improve		1. C9 : 47k/1kv ➔ Delete 2. J4 : Jump ➔330_1/8w Change (Serial no : NJF0004000 ~)
2009.12.1	. Start Current improve		. C13 : 224k/50v ➔ 105k/50v Change (Serial no : NJF0006000 ~)
2009.12.30	. Soft start time delay		. C13 : 105k/50v ➔ 474k/50v Change (Serial no : NJF0009500 ~)
2010.10.27	. LABEL Change	11	. CE Mark Add
2011.03.29	. EMI improve		. C5 : Before X-Cap 104k/275v After X-Cap 224k/275v (Serial no : NJF0042000 ~)

1. SCOPE

MODEL	ADAPTER
SPEC NO.	FPS0120-05A

2. Electrical Performance

2-1. Input Voltage & Frequency

ITEM	Reliable Voltage(AC)	Rated Voltage(Ac)	Reliable Frequency	Rated Frequency
SPEC	90~264Vac	100~240Vac	47~63Hz	50/60Hz

2-2. Input Current

-Input rated Voltage, Output rated load , Input AC Current 1.5A Maximum

- Input rated Voltage , Output no load , Input AC Current 0.06A Maximum

2-3. Inrush Current

- Input 110&230Vac 50/60Hz , Output rated load , Maximum cold start inrush Current 50A Peak

2-4 No load Loss Power

- Input Rated Voltage, Output no load , Maximum loss Power 0.3Watts

2-4. OUTPUT VOLTAGE AND CURRENT

ITEM	Output Rated Voltage	Output Voltage Range	Output Rated Current
SPEC	+ 12V	+ 11.4 ~12.6V	~ 3500mA

2-5. EFFICIENCY

When 220Vac line input voltage, the efficiency shall be 85% or better under maximum load.

2-6. Over Current Protection(Auto recovery)

The power supply shall not be damaged by a over current from the Output to return line. If the power entered the OCP mode, It shall be Shut Down and Auto recovery.

2-7. Short Circuit Protection (Auto recovery)

The power supply shall not be damaged by short between DC output and DC ground.

2-8. Hold up time

10ms minimum. Tested 220Vac input and 120W full load at output.

3. SAFETY STANDARD

3-1. Insulation Resistance

Insulation resistance shall be 100MΩ at 500Vdc between primary Live, Neutral line and secondary.

3-2. Hi-Pot Test (Dielectric Withstand Voltage)

Leakage(Cutoff) Current : 10mA
Primary to Secondary : 3.0KVAC for 1 minute
Primary to GND : 1.5KVAC for 1 minute
Mass production : 1.8KVAC for 1 seconds at Primary to GND

3-3. BURN – IN TEST

LOAD CONDITION	MAX LOAD
INPUT VOLTAGE	AC 220V
BURN-IN TEST TIME	4 HOURS

3-4. Life/Power On Hours

The power supply must be designed to operate for 10,000 power – on – hours, about 1 years at An ambient temperature of 25℃

3-5. Temperature

Operating : 0℃ to +50℃

Storage : -25℃to +60℃

4. CONNECTION

4-1. Output Connector

Part No. : DIP HARN001A

Vender : CHANG XING

4-2. Input Connector

SC-8R-F152P52R-GB [SUPERCOM**]**
DB-14-3P-6N5(T) [LECI**]**

5. BLOCK DIAGRAM

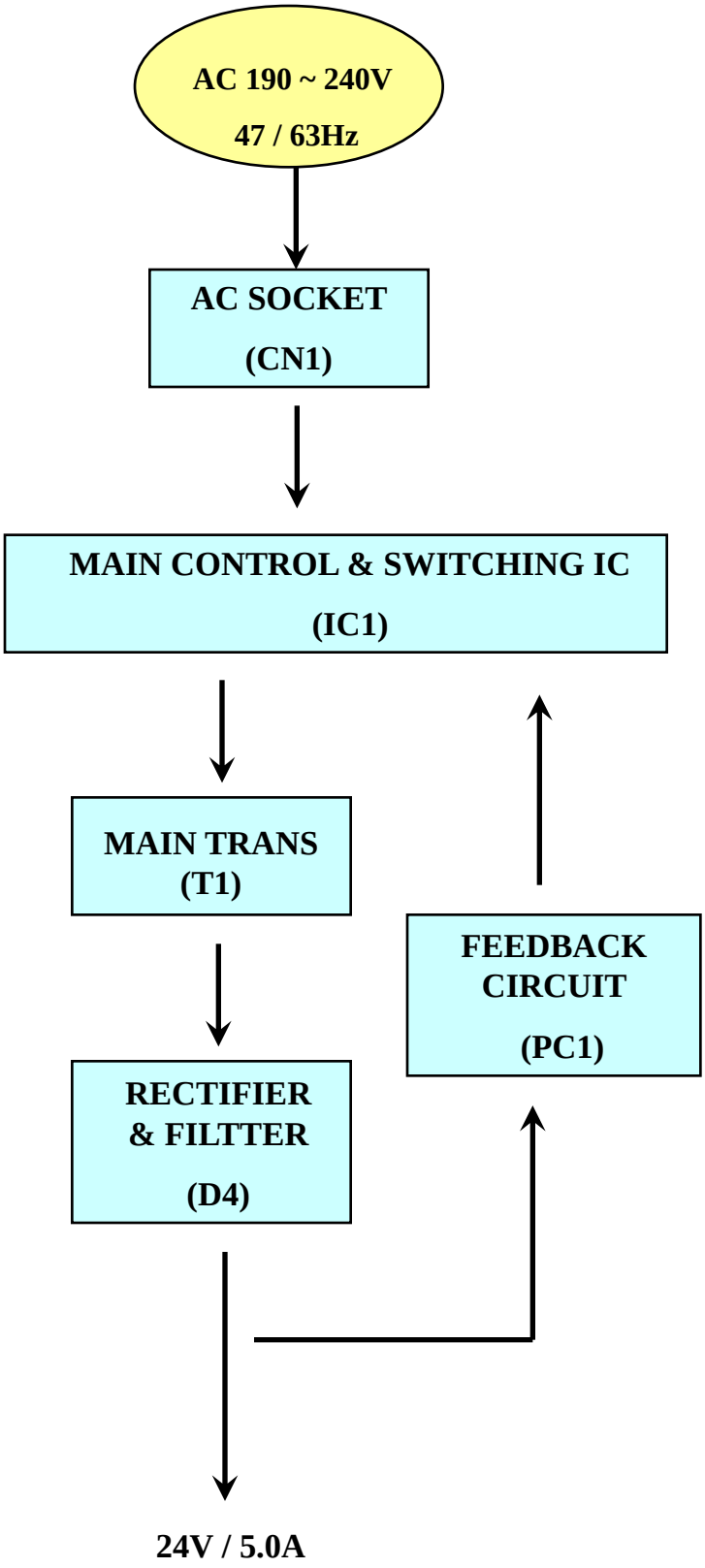

6. MECHANICAL DRAWING

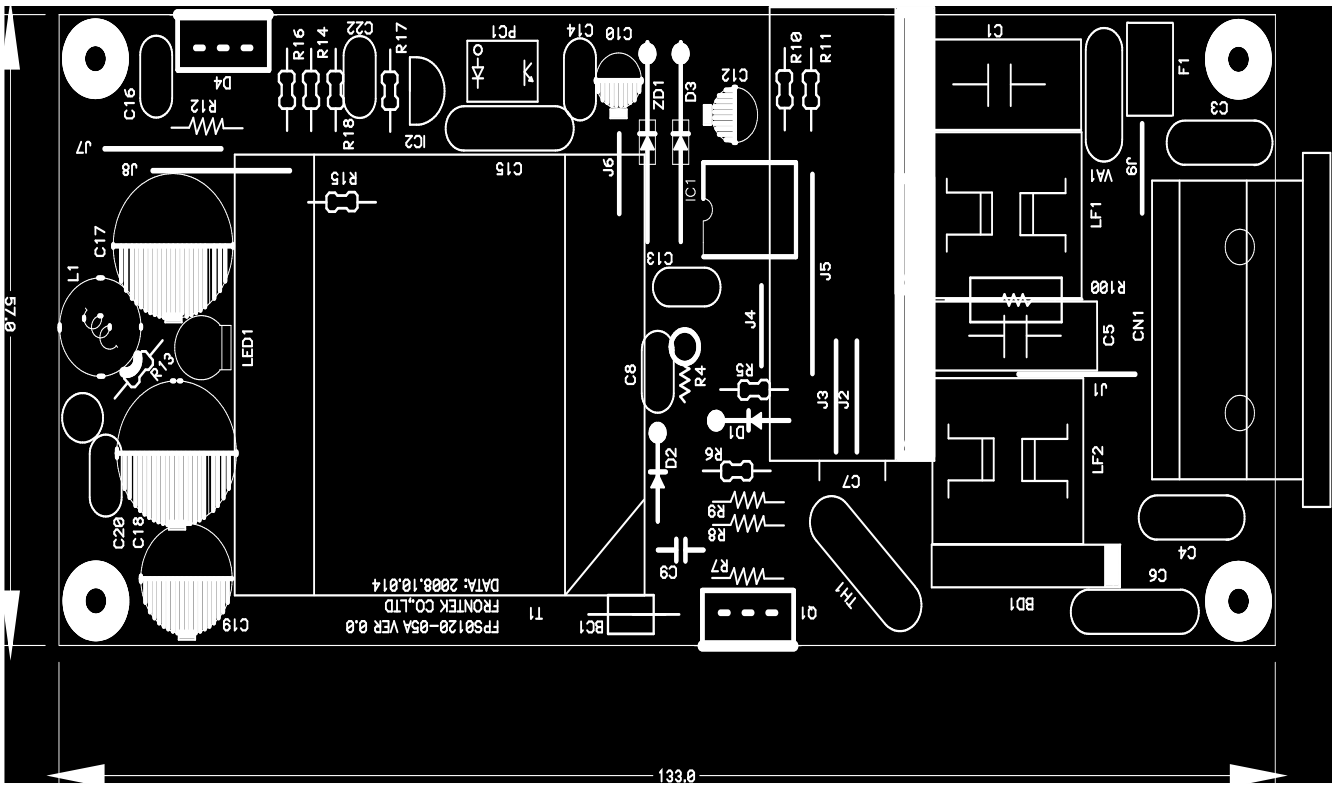

[TOP VIEW]

***. Input Connecter**

SC-8R-F152P52R-GB [SUPERCOM**]**
DB-14-3P-6N5(T) [LECI**]**

7. TOP SILK

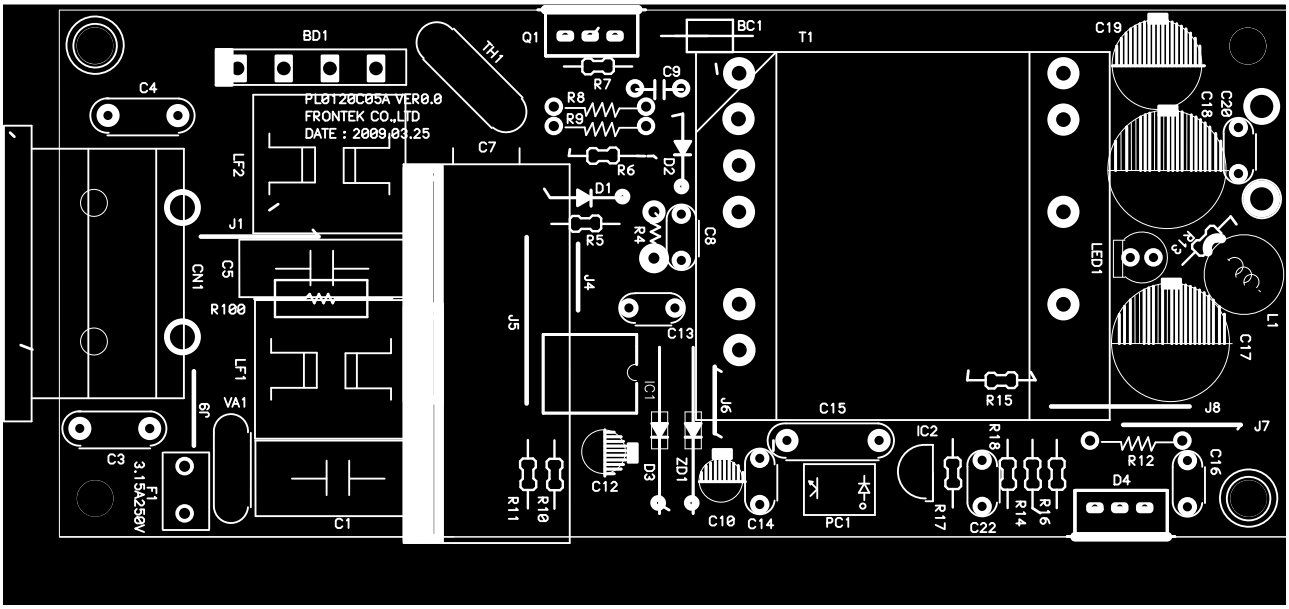

8. BOTTOM PATTERN

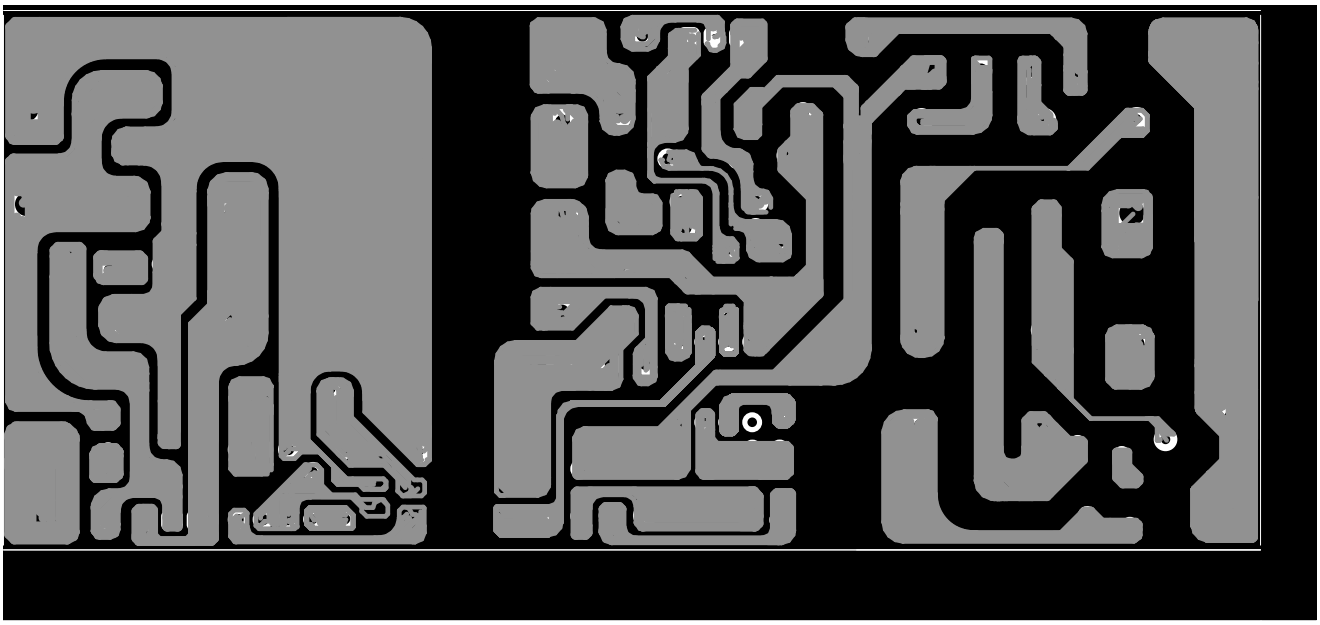

9. LABEL

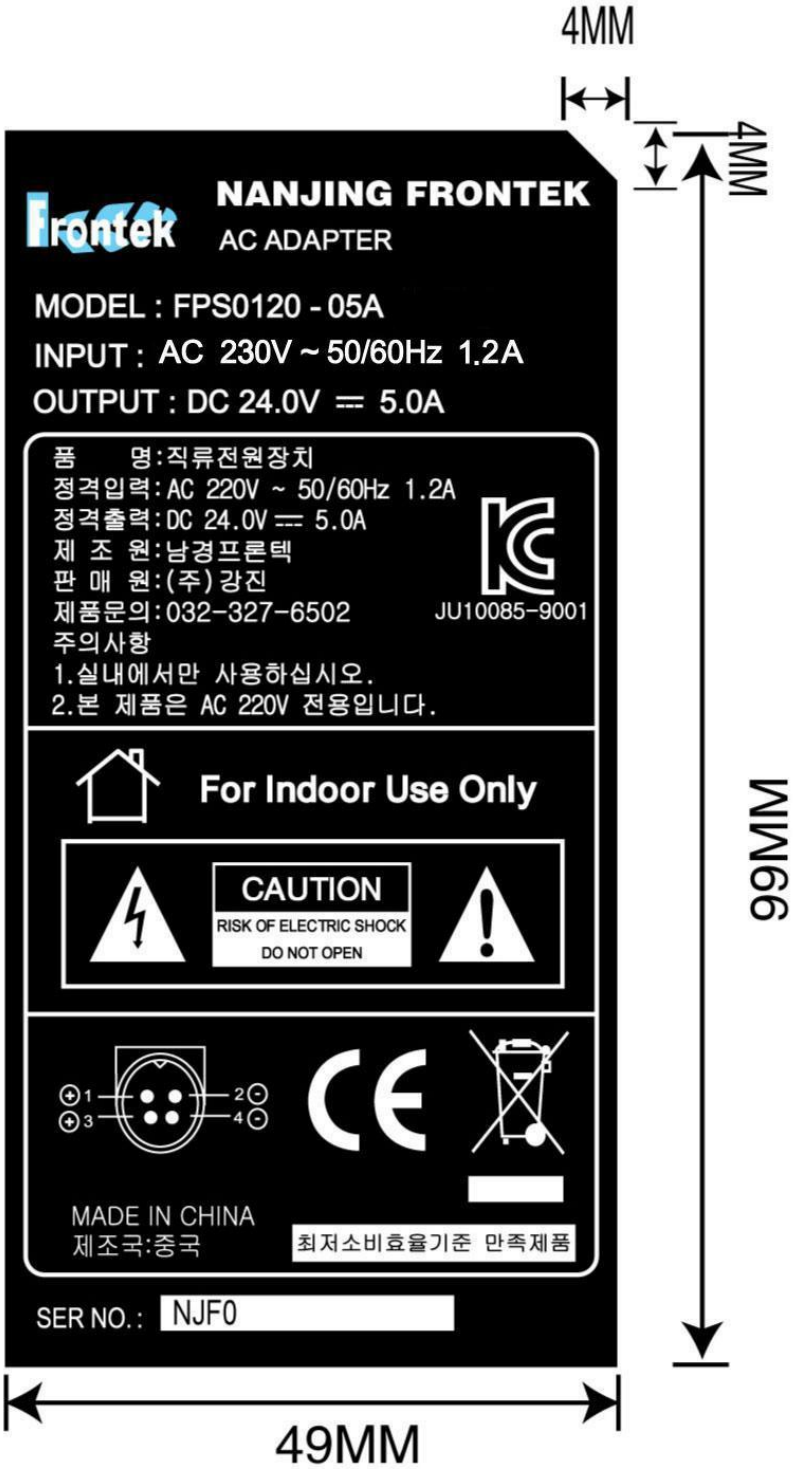
4MM
4MM
NANJING FRONTEK
AC ADAPTER
MODEL : FPS0120 - 05A
INPUT : AC 230V ~ 50/60Hz 1.2A
OUTPUT : DC 24.0V ⎓ 5.0A
품 명:직류전원장치
정격입력:AC 220V ~ 50/60Hz 1.2A
정격출력:DC 24.0V ⎓ 5.0A
제 조 원:남경프론텍
판 매 원:(주)강진
제품문의:032-327-6502
JU10085-9001
주의사항
1.실내에서만 사용하십시오.
2.본 제품은 AC 220V 전용입니다.
For Indoor Use Only
CAUTION
RISK OF ELECTRIC SHOCK
DO NOT OPEN
MADE IN CHINA
제조국:중국
최저소비효율기준 만족제품
SER NO. : NJF0
99MM
49MM

10. CASE

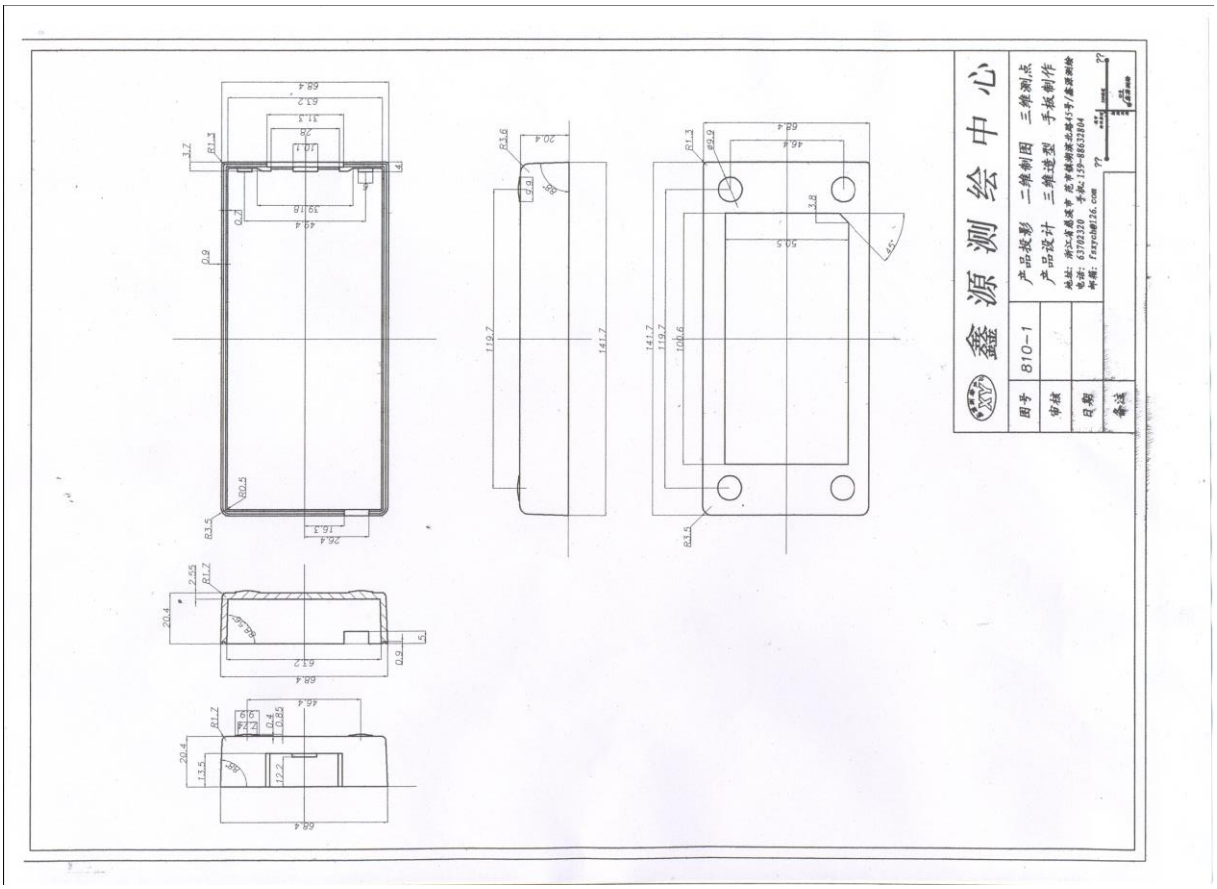

鑫源测绘中心
产品投影 二维制图 三维测点
产品设计 三维造型 手板制作
图号 810-1
审核
日期
备注

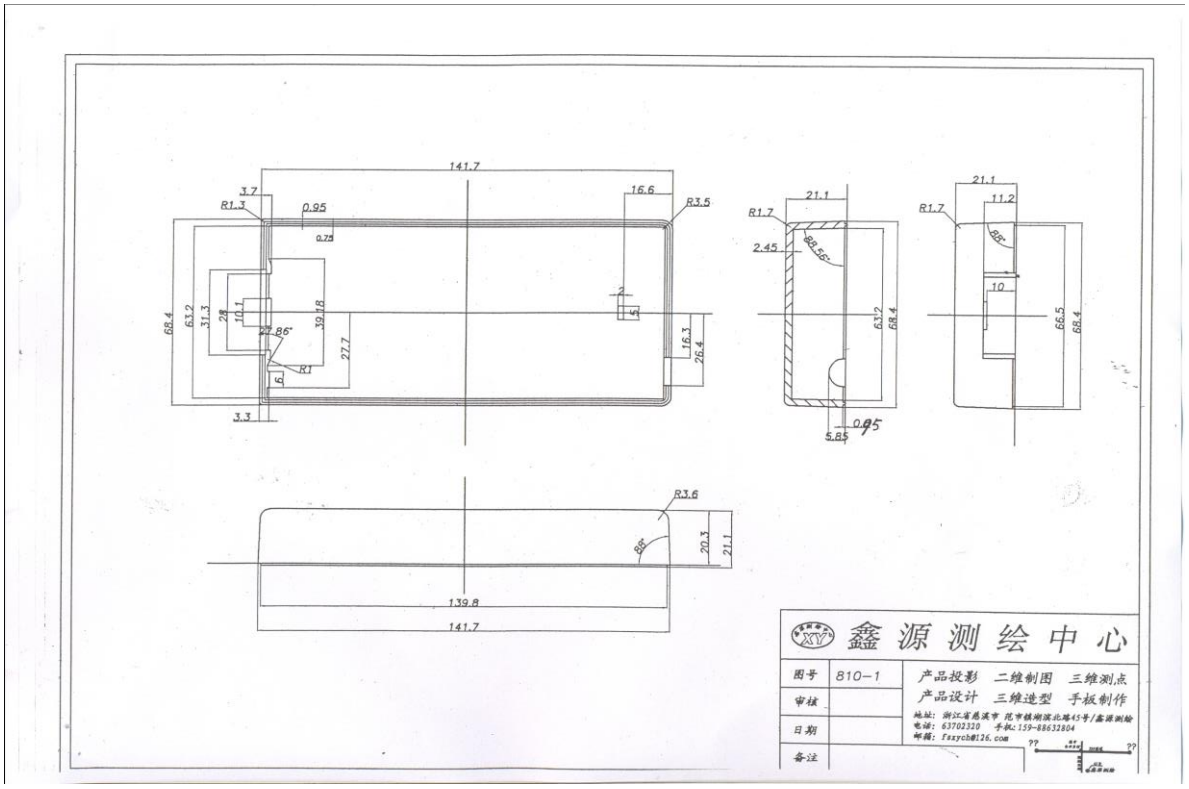

141.7
139.8
鑫源测绘中心
图号 810-1
产品投影 二维制图 三维测点
产品设计 三维造型 手板制作
审核
日期
备注

11. BOX

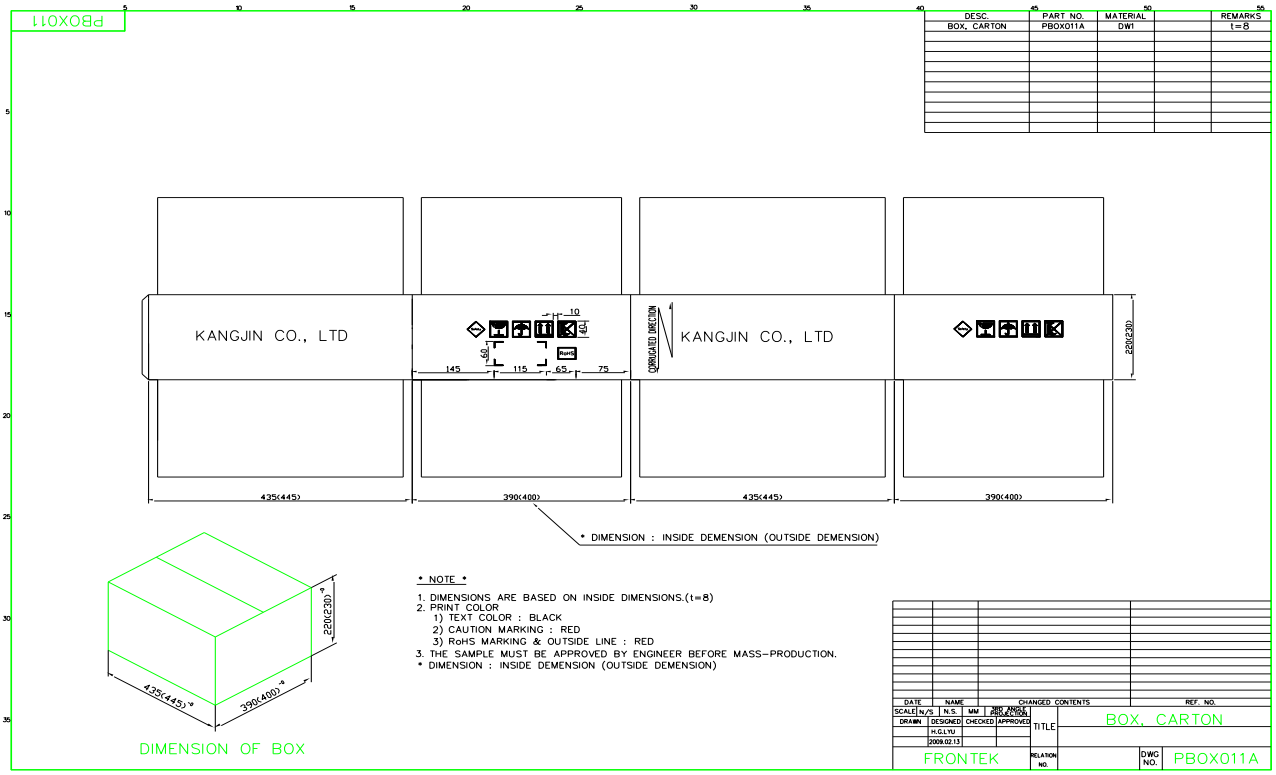
PBOX011
DESC.
BOX, CARTON
PART NO.
PBOX011A
MATERIAL
DW1
REMARKS
t=8
KANGJIN CO., LTD
KANGJIN CO., LTD
CORRUGATED DIRECTION
10
40
60
145
115
65
75
220(230)
435(445)
390(400)
435(445)
390(400)
* DIMENSION : INSIDE DEMENSION (OUTSIDE DEMENSION)
220(230)
435(445)*
390(400)*
DIMENSION OF BOX
* NOTE *
1. DIMENSIONS ARE BASED ON INSIDE DIMENSIONS.(t=8)
2. PRINT COLOR
1) TEXT COLOR : BLACK
2) CAUTION MARKING : RED
3) RoHS MARKING & OUTSIDE LINE : RED
3. THE SAMPLE MUST BE APPROVED BY ENGINEER BEFORE MASS-PRODUCTION.
* DIMENSION : INSIDE DEMENSION (OUTSIDE DEMENSION)
DATE
NAME
CHANGED CONTENTS
REF. NO.
SCALE N/S
N.S
MM
3RD ANGLE PROJECTION
DRAWN
DESIGNED
CHECKED
APPROVED
H.G.LYU
2009.02.13
TITLE
BOX, CARTON
FRONTEK
RELATION NO.
DWG NO.
PBOX011A